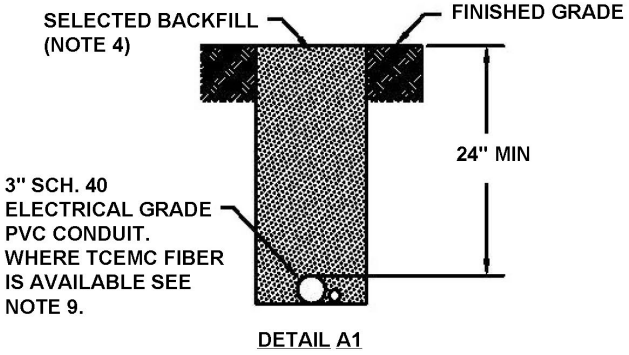

DETAIL A1

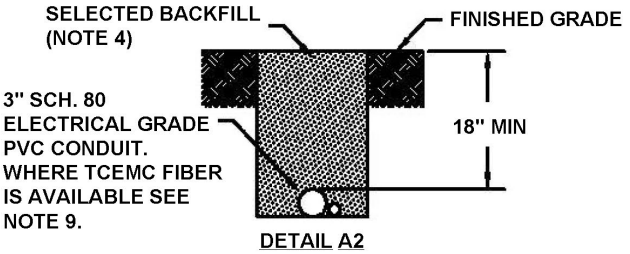

DETAIL A2

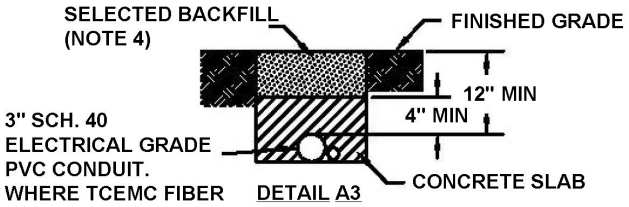

DETAIL A3

TCEMC ONLY

NOTES

1. TRENCH DEPTHS & WIDTHS GIVEN ARE THE MINIMUM WORKING REQUIREMENTS.
2. WHERE 24" DEPTH IS NOT PRACTICAL DUE TO ROCK, DEPTH MAY BE REDUCED TO 18" BY USING SCH. 80 PVC OR 12" BY COVERING CONDUIT WITH 4" OF CONCRETE. THIS MUST BE APPROVED BY TCEMC REPRESENTATIVE.
3. ALL EXCAVATED AND OTHER MATERIALS SHALL BE PLACED AT LEAST 2' FROM THE EDGE OF THE TRENCH.
4. ALL SELECTED BACK FILL SHALL BE FREE FROM STONES, ROCK, OR OTHER MATERIAL WHICH MIGHT DAMAGE THE CONDUIT SYSTEM. SELECTED BACK FILL SHALL CONTAIN NO SOLID MATERIAL LARGER THAN 2" IN DIAMETER. IF NATIVE SOILS ARE NOT SUITABLE, #57 CRUSHED GRAVEL SHALL BE SUBSTITUTED 12" ABOVE AND 4" BELOW CONDUIT.
5. FOREIGN UNDERGROUND COMMUNICATIONS CONDUIT SYSTEMS MAY BE BURIED TOGETHER AT THE SAME DEPTH WITH NO SEPARATION PROVIDED ALL PARTIES INVOLVED ARE IN AGREEMENT. OTHERWISE 12" SEPARATION IS REQUIRED.
6. GAS, WATER OR SEWER LINES MAY NOT BE INSTALLED IN THE SAME DITCH WITH ELECTRIC. WHERE THEY MUST CROSS THE ELECTRIC, A MINIMUM OF 12" VERTICAL CLEARANCE IS REQUIRED.
7. CONDUIT CROSSING UNDER DRAINAGE DITCHES OR SMALL CREEKS SHALL BE BELOW 4" CONCRETE SLAB. THE LENGTH OF THE SLAB SHALL BE DETERMINED IN THE FIELD BY TCEMC.
8. ALL ELECTRIC CONDUIT ELBOWS SHALL BE 3" SCH. 80 WITH MINIMUM 24" RADIUS. SERVICES EXCEDING 150FT MAY REQUIRE A LARGER RADIUS ELBOW. ALL CONDUITS SHOULD INCLUDE A 50LB P-LINE.
9. IN AREAS WHERE TRI-COUNTY BROADBAND SERVICE IS AVAILABLE, A 1-1/4" SCH. 40 ELECTRICAL GRADE PVC CONDUIT SHALL BE INSTALLED WITH THE ELECTRIC CONDUIT. FIBER ELBOWS SHALL BE MINIMUM 18" RADIUS SCH. 80. CONDUIT SHOULD INCLUDE A 50LB P-LINE.

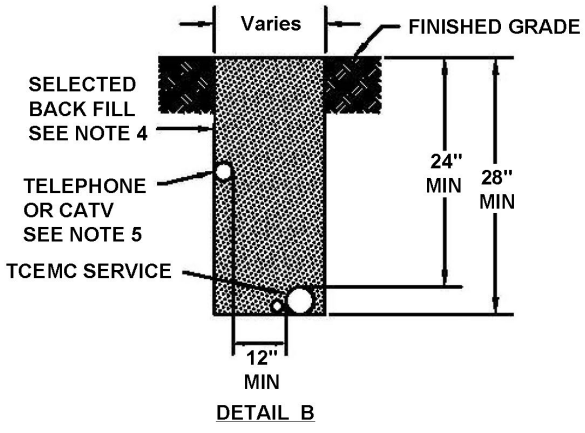

DETAIL B

TCEMC AND COMMUNICATIONS

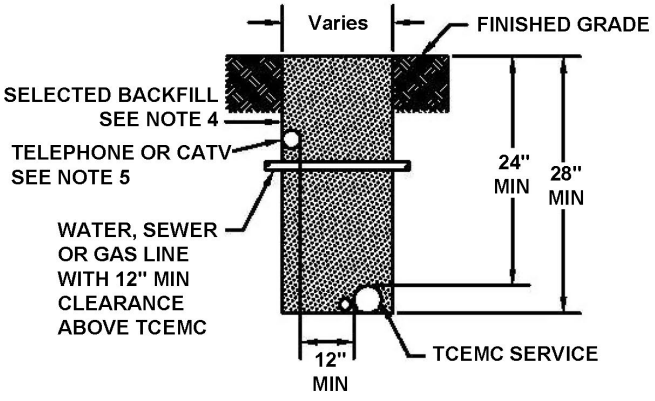

DETAIL C

TCEMC AND COMMUNICATIONS WITH GAS, WATER, OR SEWER CROSSING

Tri-County Electric

TRENCH REQUIREMENTS
SECONDARY DITCH DETAILS

DATE: 5-1-23
APPR. JWB
REV. JWB